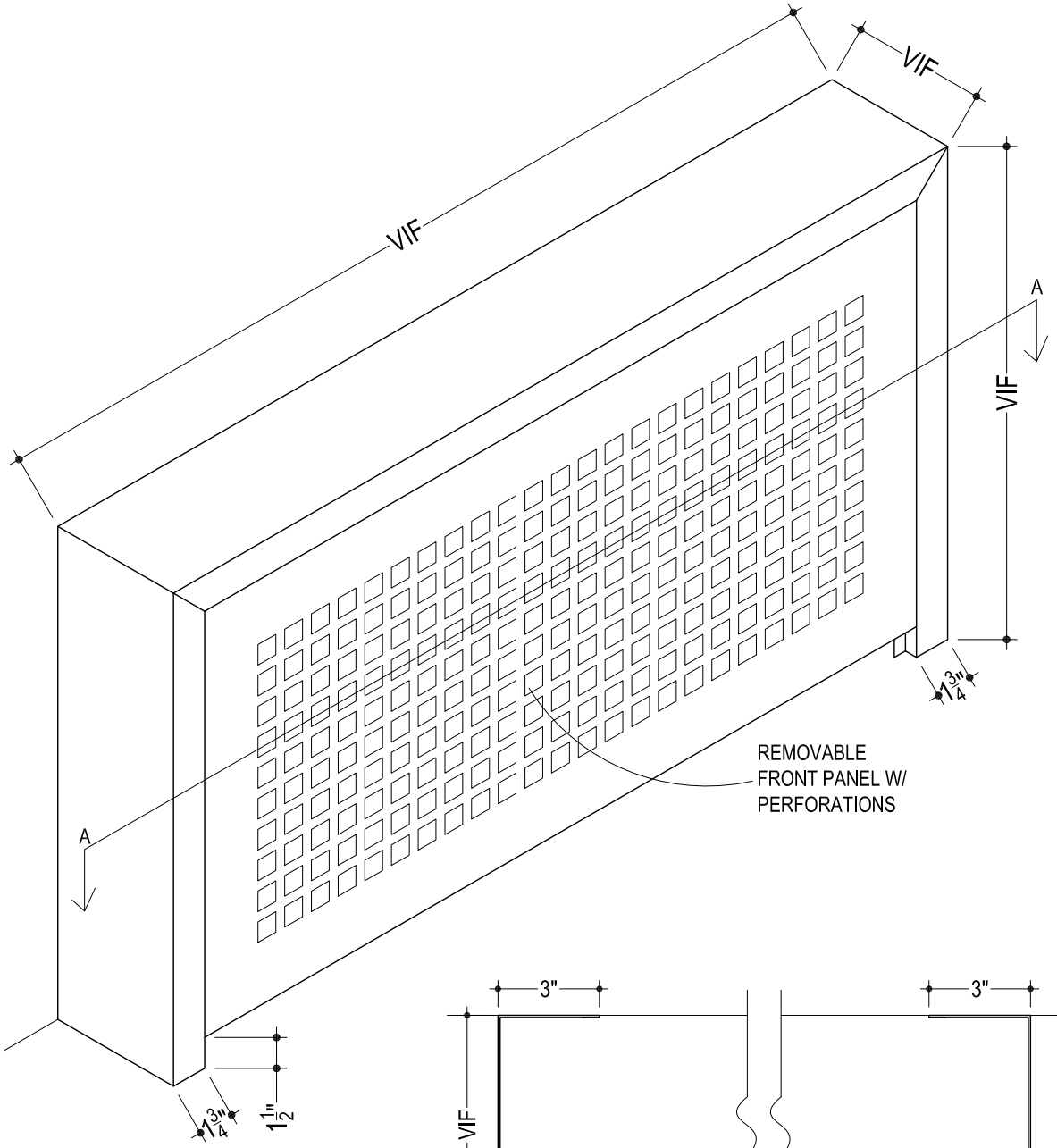

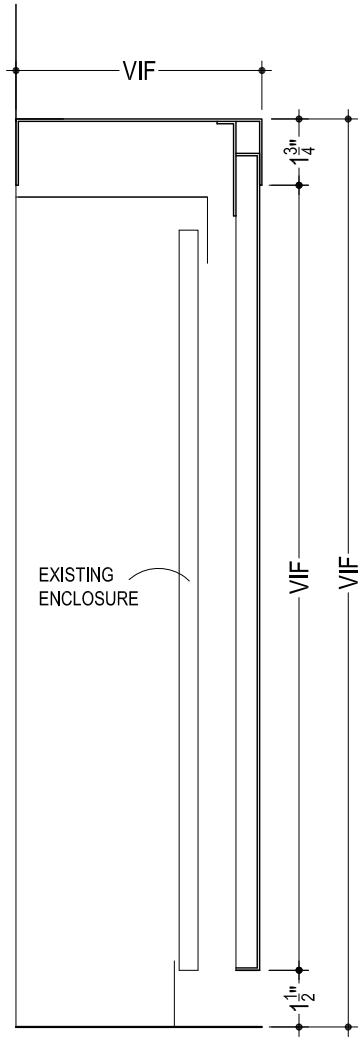

TYPICAL SECTION
THROUGH FRONT PANEL

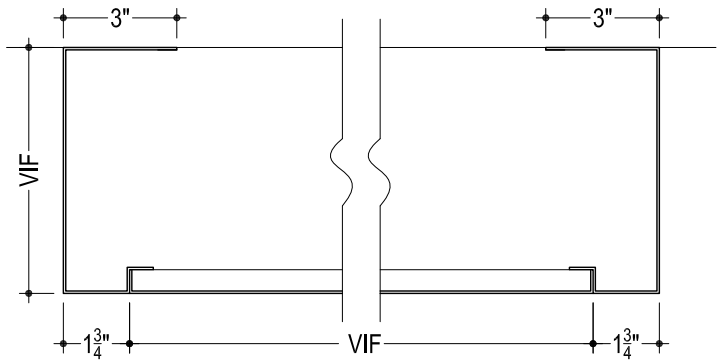

SECTION A-A

INTERIOR METALS

255 48TH ST. BROOKLYN NY, 11220 (718) 439-7324

JOB:	IM-193.4
RADIATOR ENCLOSURE DETAILS - SP TYPE	ISSUED:
GC:	REVISED:
NOTES:	